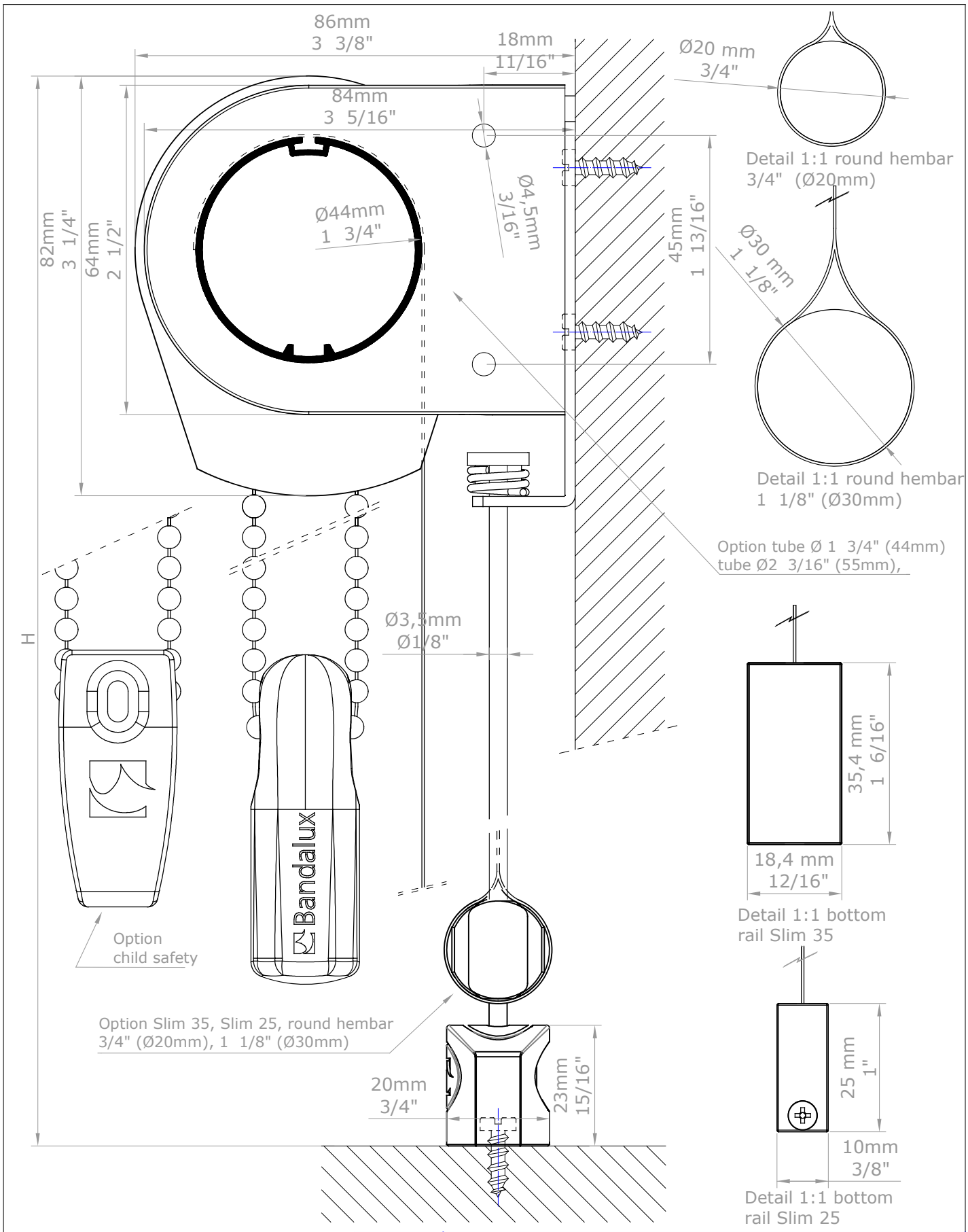

D. REVIS.		BANDALUX	
REVISION	1 2 3 4 5 6 7 8 9		
DATE	16-05-2017	PLANE Nº	
DESIGN	Antonio F.	FORMAT	A-4
SCALE 1/1	Rolling blind Premium medium size (I). Cable Ø1/8" (Ø3.5mm) guided Installation: wall / floor Mechanism: Chain VTX20 Bottom rail: round hembar 3/4" (Ø20mm) Tube 1 3/4" (Ø44mm)		